TEST NAME: **Math Gr 8 FAIM 2016 Form 2-B**
TEST ID: **1549457**
GRADE: **Eighth Grade**
SUBJECT: **Mathematics**
TEST CATEGORY: **State Interim Assessment**

Student:
Class:
Date:

**Instructions**

Use your Response Document to answer question 22.

---

1. The students of seventh and eighth grade were asked whether they prefer swimming or basketball. The results of the survey are summarized in the table below.

| | Swimming | Basketball |
|---|---|---|
| Seventh Graders | 20 | 12 |
| Eighth Graders | 18 | 15 |

About which percentage of the students who prefer swimming are eighth graders?

A. 44 %

B. 47 %

C. 53 %

D. 56 %

2. Mrs. Valdez created a scatter plot that showed the number of days a student was absent compared to the student's grade average in class.

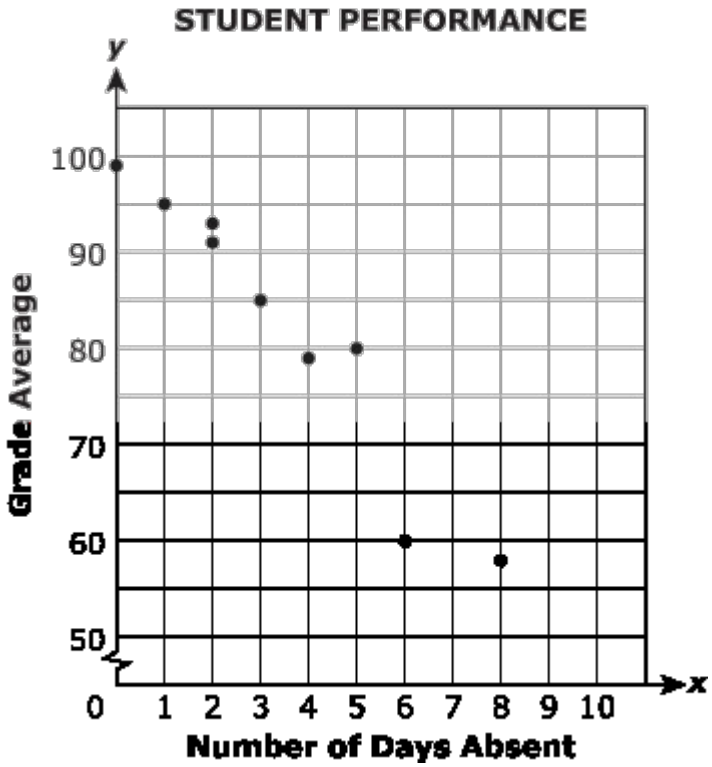


Which statement best describes the association of the data shown in the scatter plot?

A. It has a nonlinear association, since it clusters towards the top.

B. It has a nonlinear association, since it has at least one outlier.

C. The association cannot be determined based on the data set.

D. The association is linear based on the overall pattern.

3. Jenny's pencil case is 24 cm long, 11 cm wide, and 4 cm high. What is the longest length, in cm, of a pencil that can fit in Jenny's pencil case?

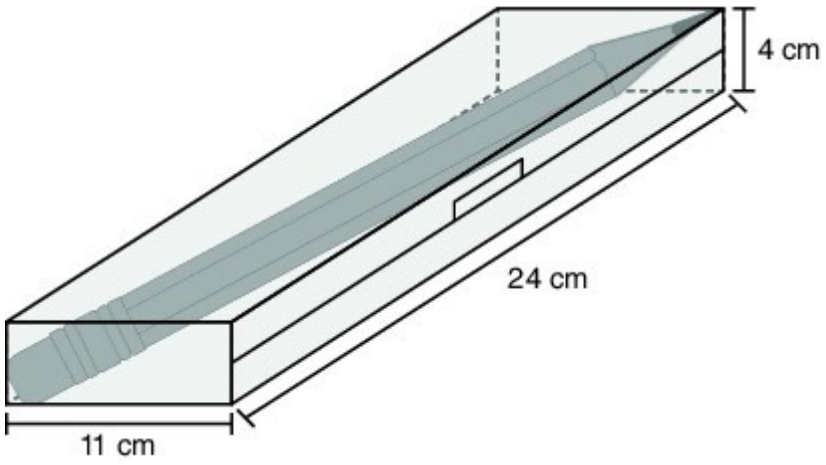


A. 21.7

B. 24.3

C. 26.4

D. 26.7

7. The table below shows the total cost of magazine A based on the number of months of the subscription.

**MAGAZINE A**

| Months | Cost (in dollars) |
|---|---|
| 2 | 4.90 |
| 4 | 9.80 |
| 6 | 14.70 |

The equation $c = 3.15m$ relates the total cost, $c$, in dollars, of magazine B for a given number of months of the subscription, $m$. Which statement is true?

A. Magazine A costs less per month than magazine B.

B. Magazine A costs more per month than magazine B.

C. Magazine A costs less than magazine B for the first month only.

D. Magazine A costs more than magazine B for the first month only.

8. Molly is using the diagram shown below to show that the sum of the interior angles in triangle *QPR* is 180°.

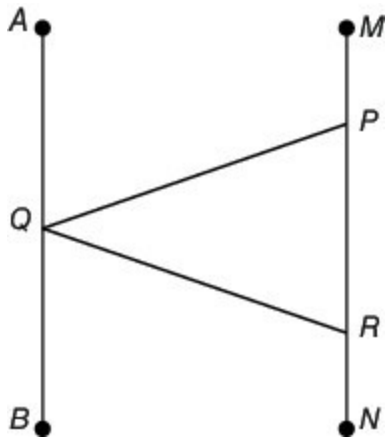


Molly's teacher told her that $\overline{AB}$ is parallel to $\overline{MN}$. In the table below, Molly listed the steps and reasons she is using to show that $m\angle PQR + m\angle QPR + m\angle QRP = 180°$.

| Steps | Reasons |
|---|---|
| 1. *AB* is parallel to *MN* | 1. Given |
| 2. $m\angle AQP + m\angle PQR + m\angle RQB = 180°$ | 2. Angles on a straight line are 18 |
| 3. $\angle AQP$ is congruent to $\angle QPR$ and $\angle BQR$ is congruent to $\angle QRP$ | 3. ? |
| 4. $m\angle AQP = m\angle QPR$ $m\angle BQR = m\angle QRP$ | 4. Definition of congruent angles |
| 5. $m\angle PQR + m\angle QPR +$ | 5. Substitution |

What is the reason that justifies step 3 in Molly's table?

9. The ordered pairs shown below represent a relation *R*.

$R = \{(-2, 2), (2, -2), (-4, 4), (4, -4)\}$

Part A. Is the relation *R* a function? Explain why or why not.

Part B. If $(4, k)$ is an ordered pair within relation *R*, for what value or values of *k* is relation *R* a function and for what value or values of *k* is relation *R* not a function?

Use words and/or numbers to show your work.

10. Which equation represents a linear function?

A. $y = x^2 + 2$

B. $y = 3x - 2$

C. $y = 3x^3 - 1$

D. $y = \sqrt{x} + 1$

11. What is the value of the expression $2^2 \cdot 2^{-2} \cdot 3^4 \cdot 3^{-4}$?

12. The graph shows the temperature at different depths below the ground recorded by a mining company.

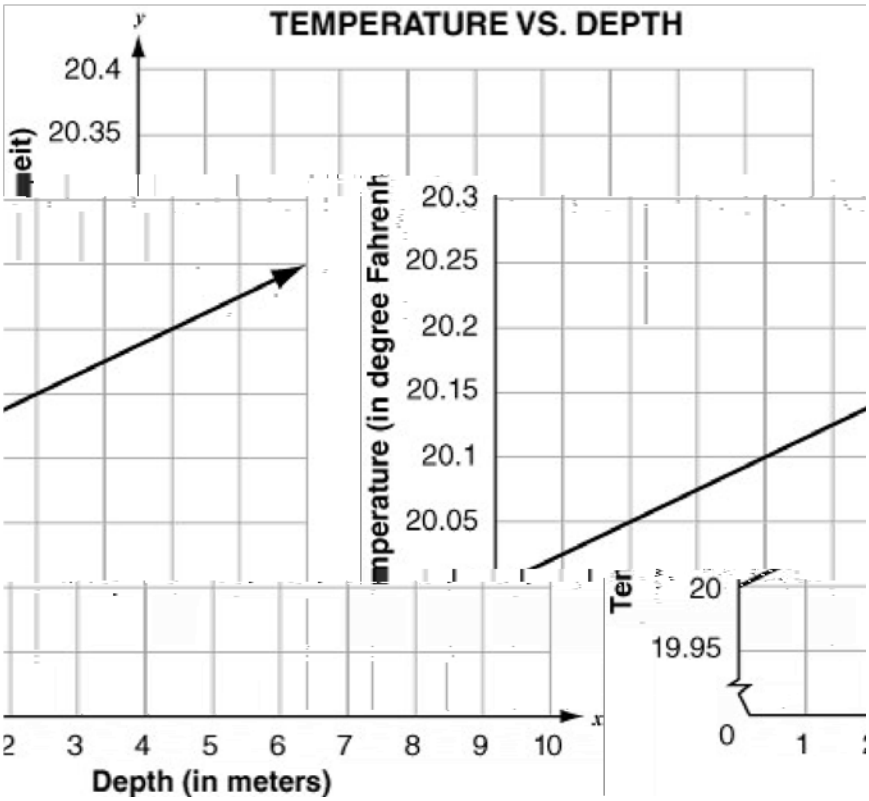


What does the *y*-intercept represent in terms of the given context?

13. A puppy's weight, in *y* ounces, after *x* weeks, can be represented by $y = 1.2x + 2.25$. Which statement is a correct interpretation of this relationship?

A. The puppy's weight after 1.2 weeks is 2.25 ounces.

B. The puppy's weight when it was born was 1.2 ounces.

C. The puppy's weight increases at the rate of 1.2 ounces per week.

D. The puppy's weight increases at the rate of 2.25 ounces per week.

14. John drew point *A* on the center of a page. He then translated point *A* directly up *k* units to point *A*' and then translated point *A* directly down *k* units to point *A*". Which statement is NOT true?

A. *A*" is the reflection of point *A*' across a horizontal line passing through *A*.

B. Rotation of point *A*" by 90° in a counterclockwise direction about point *A* gives point *A*'.

C. Rotation of point *A*' by 180° in a clockwise direction about point *A* gives point *A*".

D. *A* is between *A*' and *A*".

15. What value of *x* makes the equation below true?

$$9x - 15 - 2x = 3(-20 + 3x)$$

16. The number of Internet users in North America in 2012 was approximately $2.7 \times 10^8$, which was 250 million fewer than the number of users in Europe. What was the number of Internet users in Europe in 2012? Write your answer in scientific notation.

17. Which equation **best** models the relationship of *x* and *y* seen in the data points on the graph below?

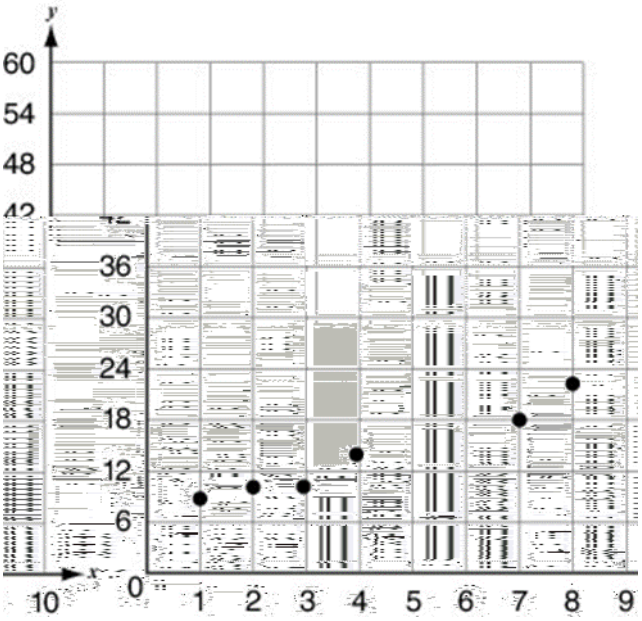


A. $y = 6$

B. $y = 2x$

C. $y = 6x + 2$

D. $y = 2x + 6$

18. Figures 1 and 2 shown below are congruent.

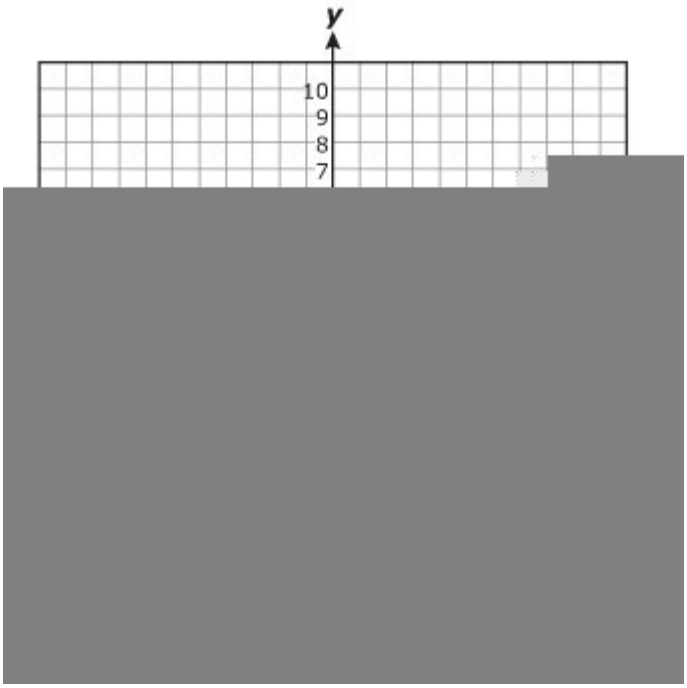


Figure 1 went through a series of no more than three transformations which resulted in Figure 2.

**Part A** Provide a series of no more than three transformations, not including rotations, that could have been used to create Figure 2. If this is not possible, explain your reasoning.

**Part B** Provide a different series of no more than three transformations, not including translations, that could have been used to create Figure 2. If this is not possible, explain your reasoning.

19. What values of *x* and *y* satisfy the system of equations shown below?

$3x - 2y = 7$
$9x - 6y = 21$

20. The table below represents a linear relationship between *x* and *y*.

| x | y |
|---|---|
| 1 | 8 |
| 2 | 11 |
| 3 | 14 |
| 4 | 17 |

Which statement correctly compares the rate of change of the values in the table with the rate of change of the equation $y = 2x + 10$.

A. The rate of change in the table is equal to the rate of change of $y = 2x + 10$.

B. The rate of change in the table is less than the rate of change of $y = 2x + 10$.

C. The rate of change in the table is greater than the rate of change of $y = 2x + 10$.

D. The rate of change in the table is undefined, which cannot be compared with the rate of change of $y = 2x + 10$.

21. A cylindrical tin can for cookies has a height of 6 inches and a diameter of 3 inches. What is the volume of the tin can? Include the units and round your answer to the nearest tenth of a cubic inch.

22. Part A. Construct a number line with the following values. Make your placement of each number as precise as possible.

$\frac{\sqrt{2}}{2}$, $\frac{\sqrt{3}}{2}$, $\sqrt{8}$, $\sqrt{3}+\sqrt{8}$, $2\pi$

Part B. Explain your placement of each of the numbers. How did you estimate the placement of each number?

Part C. What is another irrational number between $\frac{\sqrt{3}}{2}$ and $\sqrt{8}$? Is the number you chose closer to $\frac{\sqrt{3}}{2}$ or $\sqrt{8}$? Explain your answer.

Part D. How can you use the positions you chose for the numbers in part A to find the positions of the following numbers?

$\frac{\sqrt{3}}{2}+\sqrt{8}, 2\pi-\sqrt{3}-\sqrt{8}, \frac{\sqrt{2}+\sqrt{3}}{4}$

Part E. Write a note to a fellow student about some general strategies for finding the approximate position on a number line for square roots and the sums, differences, and averages of rational numbers.

Place an "X" in the answer box below.

Answer the question on the Response Document provided. Click next.